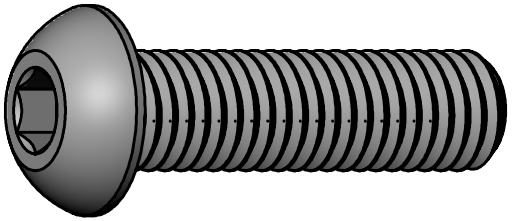

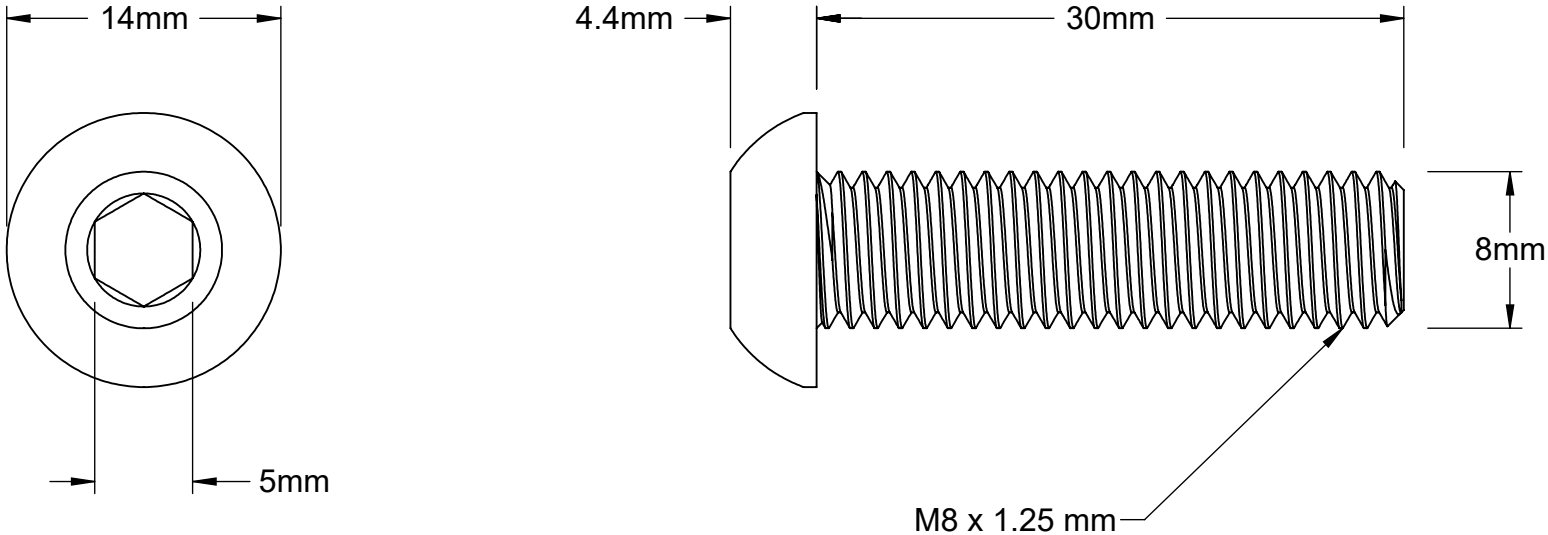

https://www.trtbolt.com	Part Number: **TBBTHEM8-125F30**
Information in this drawing is only for reference.	Titanium Button Head Hex Bolt M8x1.25x30mm H5