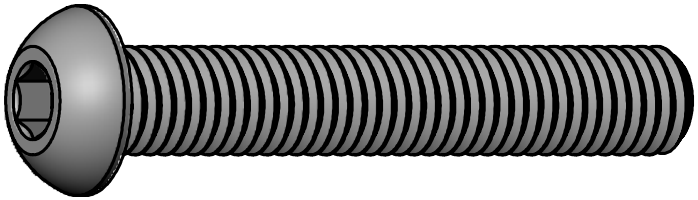

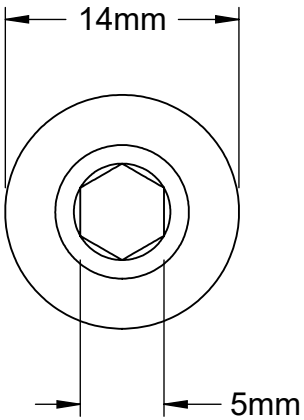

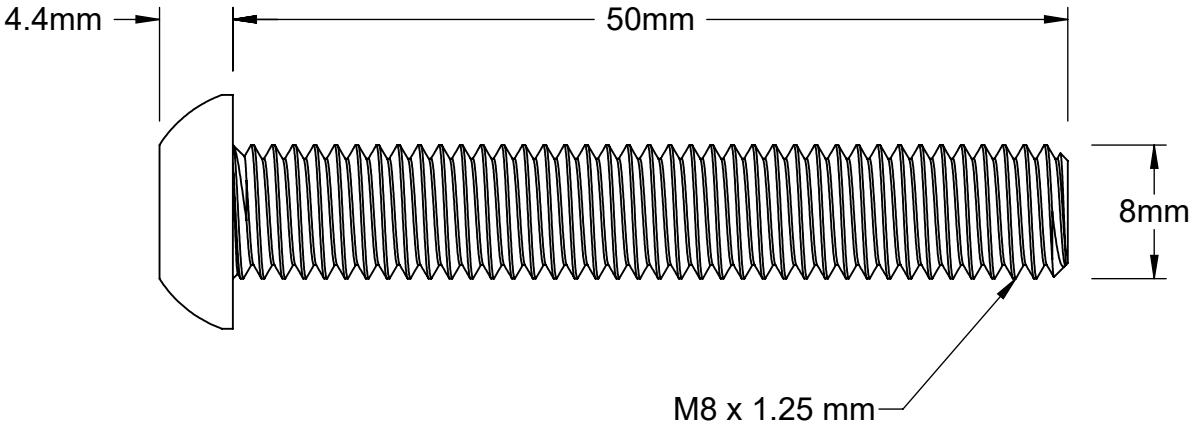

https://www.trtbolt.com	Part Number: **TBBTHEM8-125F50**
Information in this drawing is only for reference.	Titanium Button Head Hex Bolt M8x1.25x50mm H5