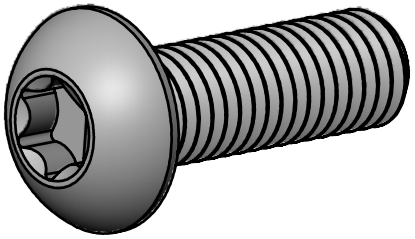

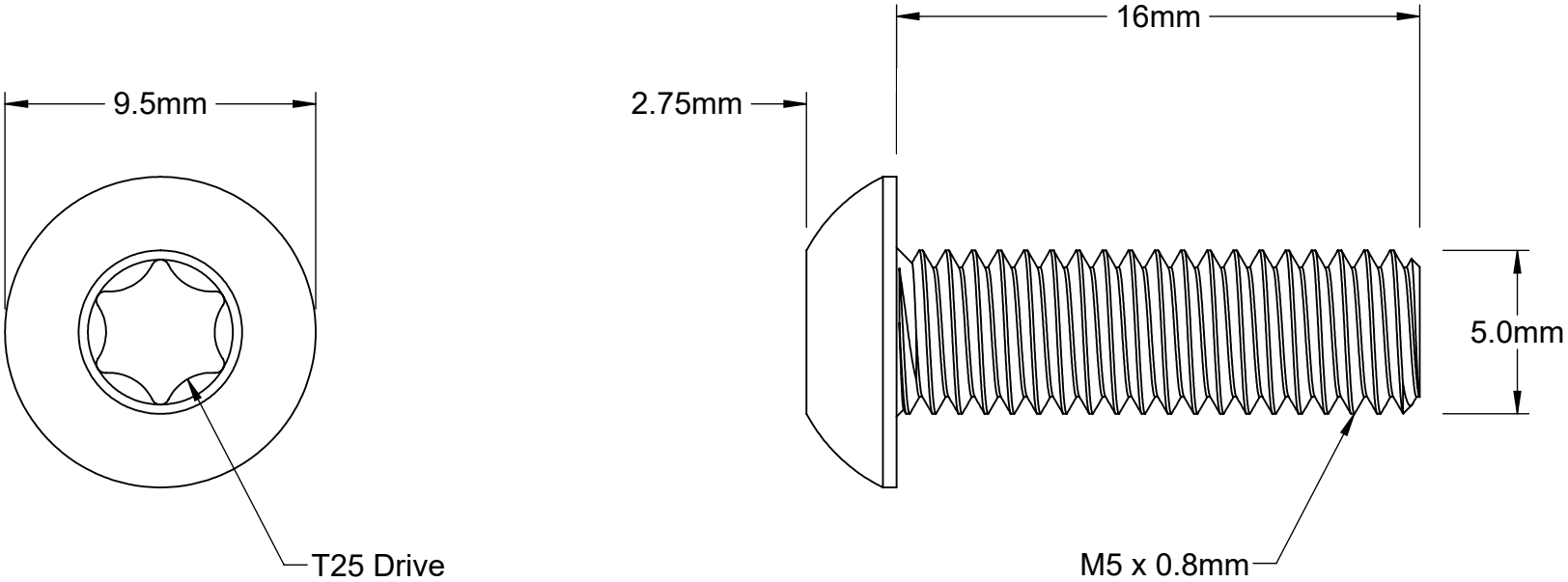

https://www.trtbolt.com	Part Number: **TBBTTOM5-080F16**
Information in this drawing is only for reference.	Titanium Button Head Torx Bolt M5x0.80x16mm T25