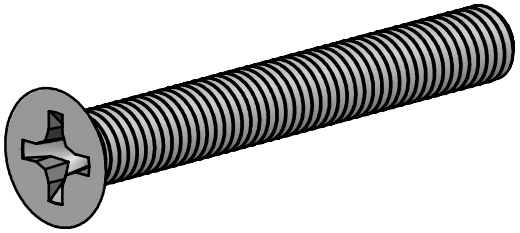

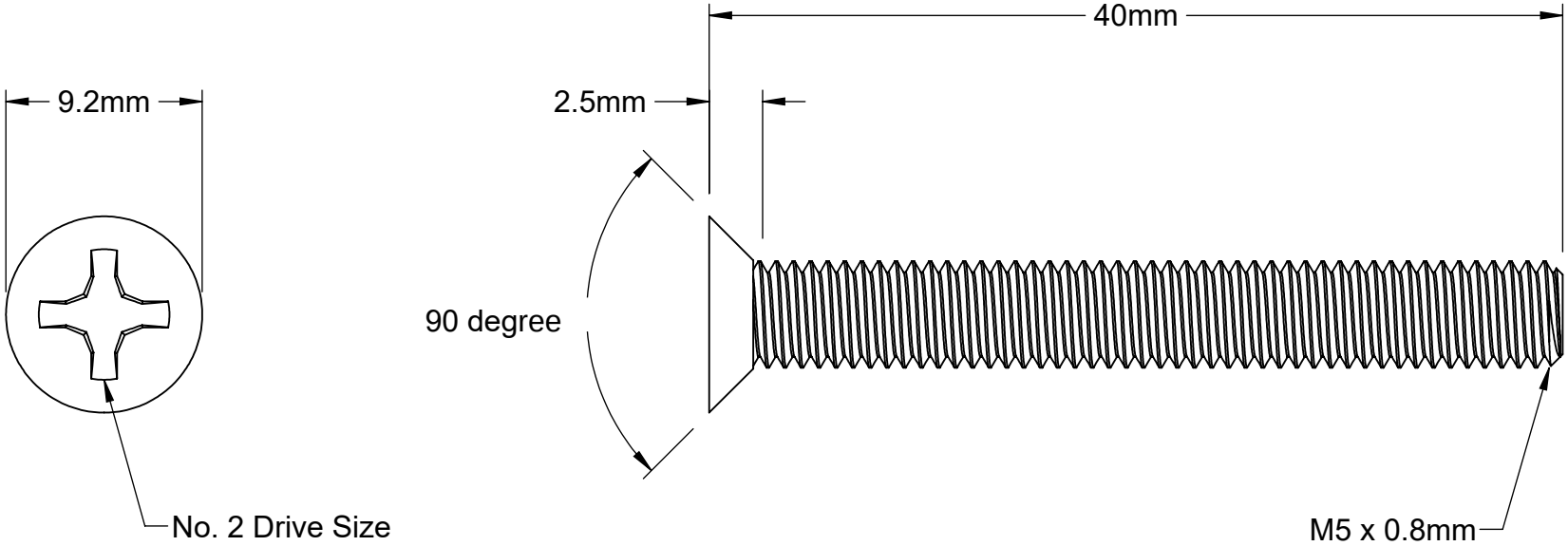

https://www.trtbolt.com	Part Number: **TBFAPHM5-080F40**
Information in this drawing is only for reference.	Titanium Flat Head Philips Bolt M5x0.80x25mm No.2