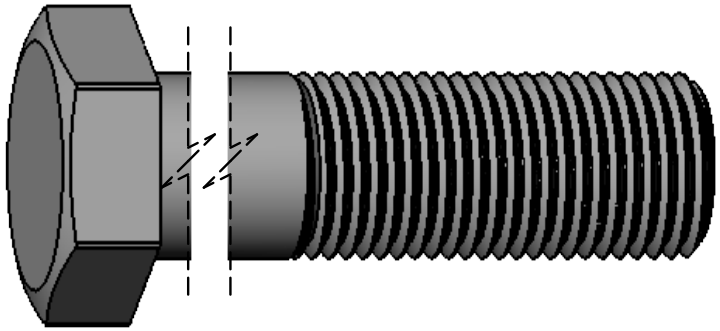

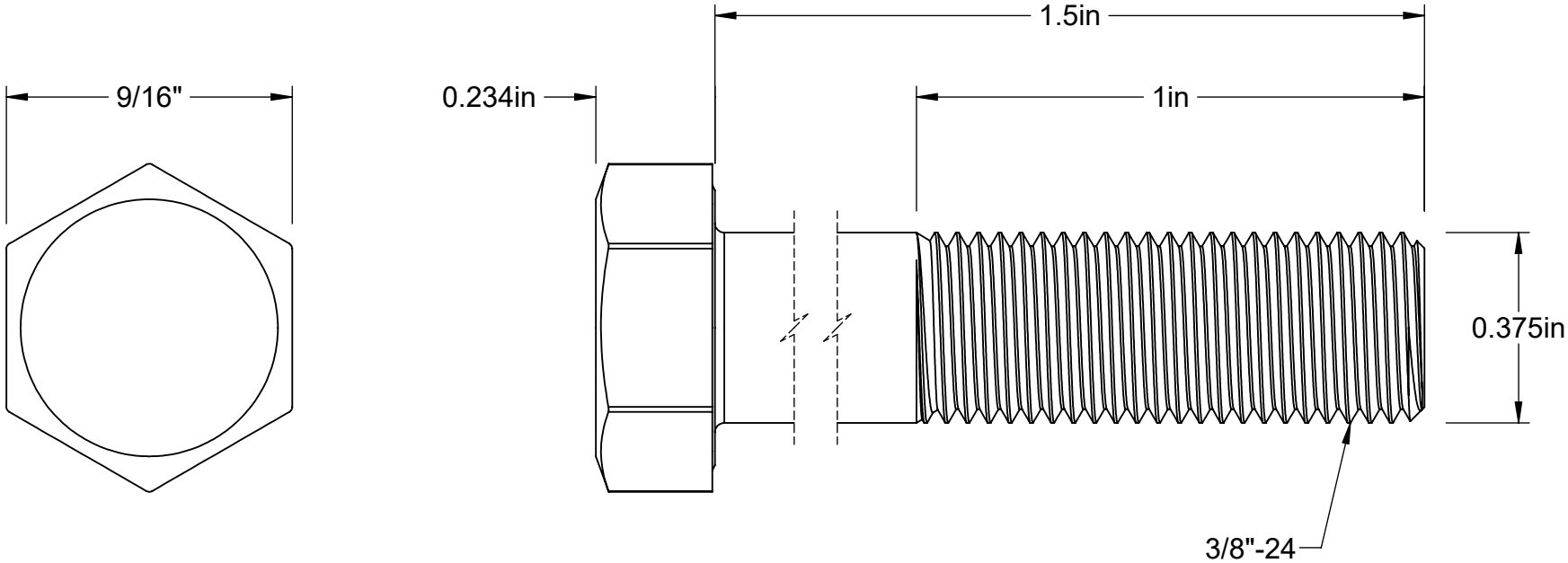

https://www.trtbolt.com	Part Number: **TBHXSSI3-8-24P3-2**
Information in this drawing is only for reference.	Titanium Hex Head Bolt 3/8-24xP3/2Inch H9/16