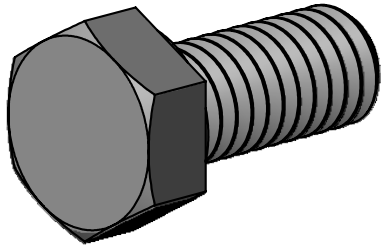

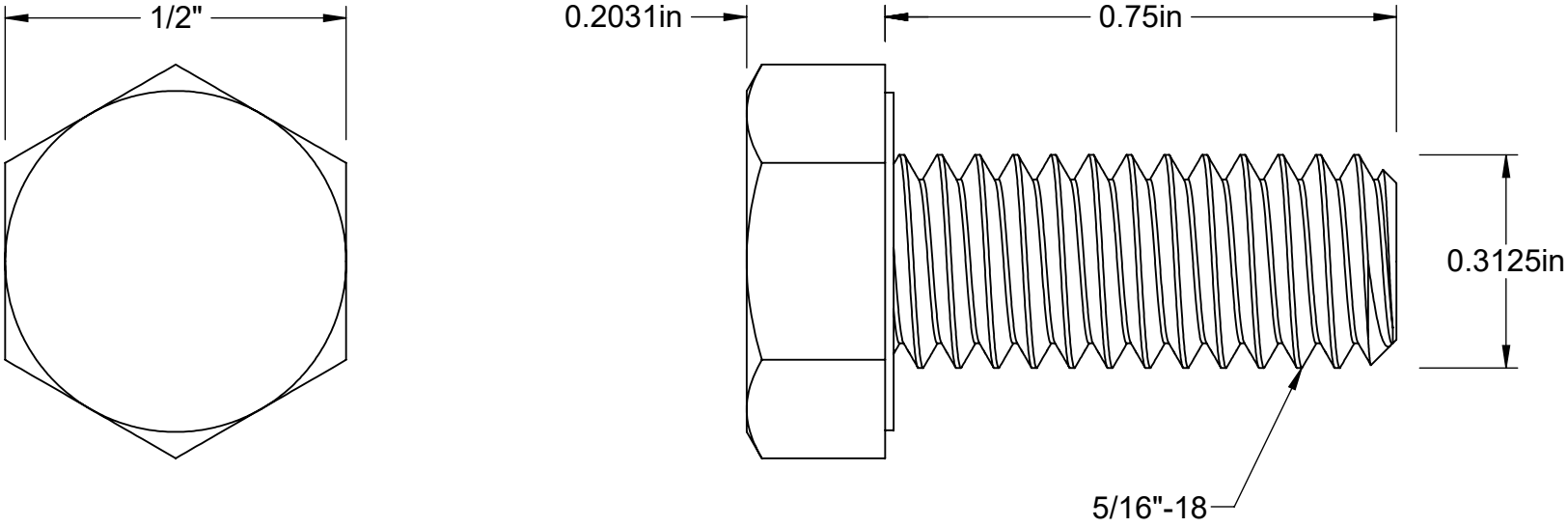

https://www.trtbolt.com

Information in this drawing is only for reference.

Part Number: **TBHXSSI5-16-18F3-4**

Titanium Hex Head Bolt
5/16-18x3/4Inch H1/2