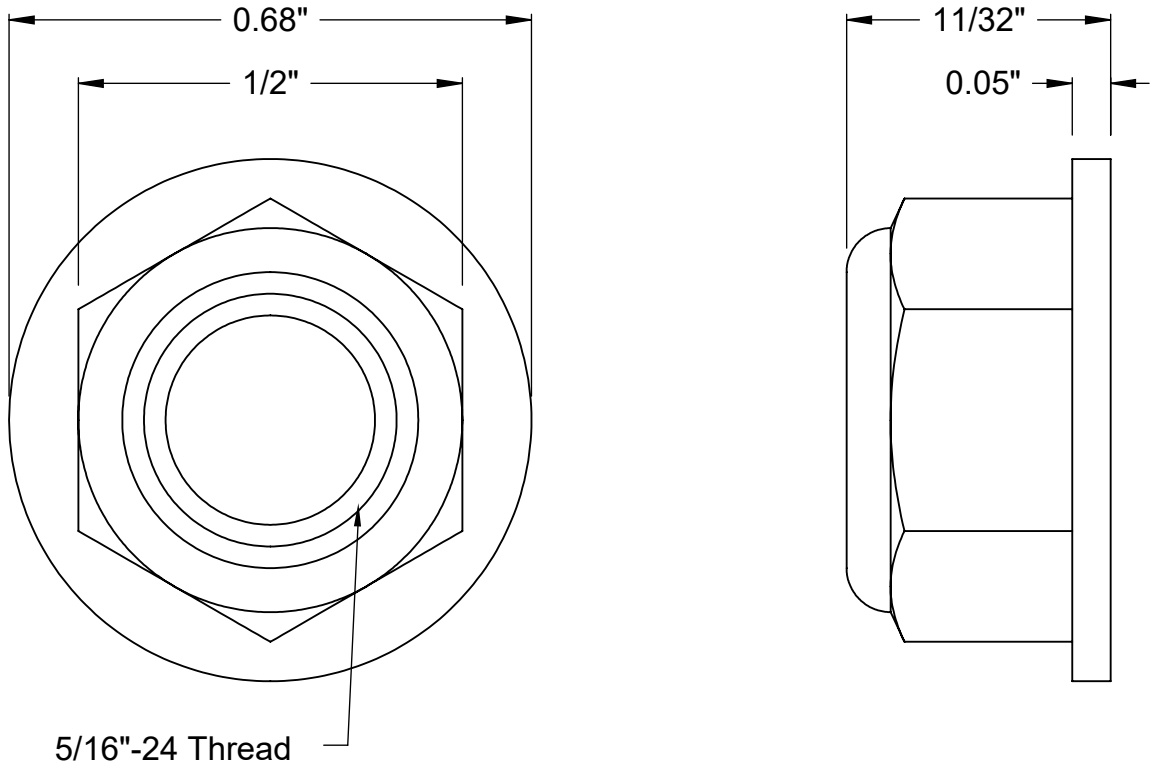

https://www.trtbolt.com	Part Number: **TNNLHFI5-16-24TH11-32**
Information in this drawing is only for reference.	Titanium Nylon Lock Flange Hex Nut 5/16-24x11/32Inch H1/2