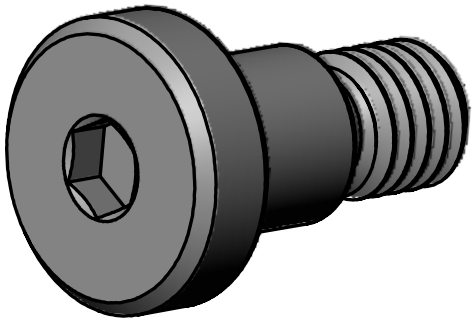

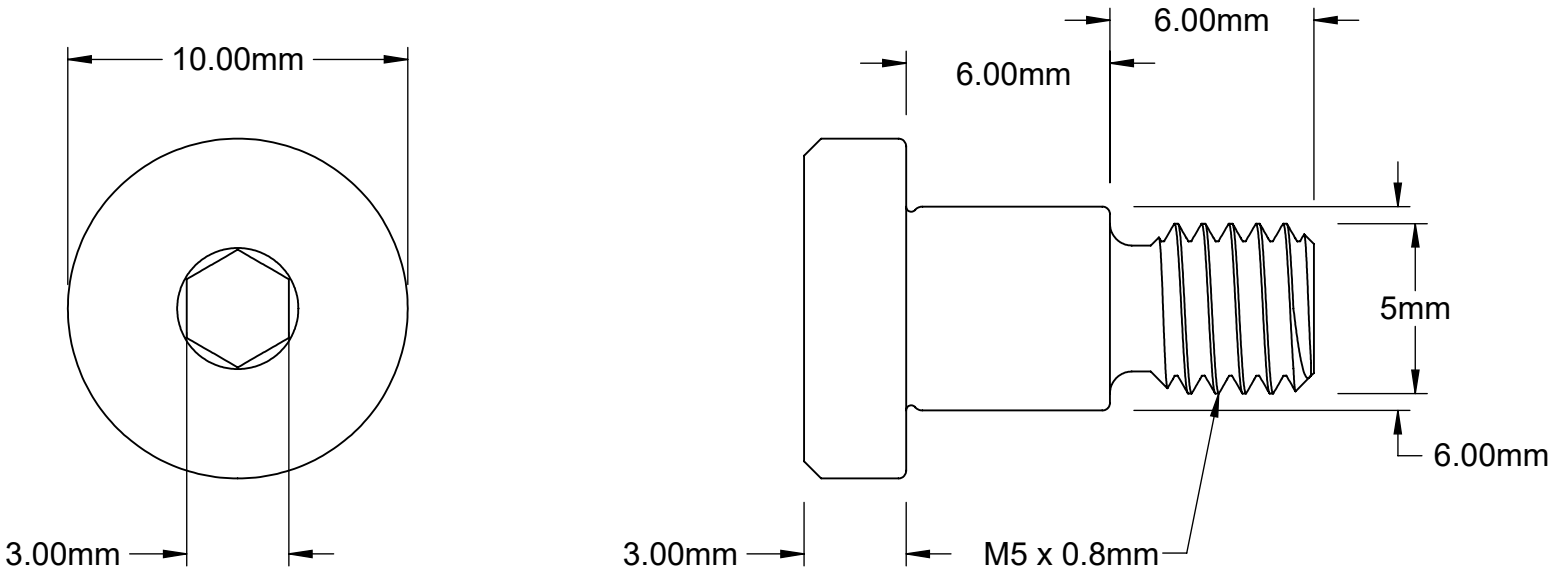

https://www.trtbolt.com	Part Number: **TBSDHEM5-080P6LP**
Information in this drawing is only for reference.	Titanium Shoulder Hex Bolt M5x0.80x6mm H3 Low-Profile