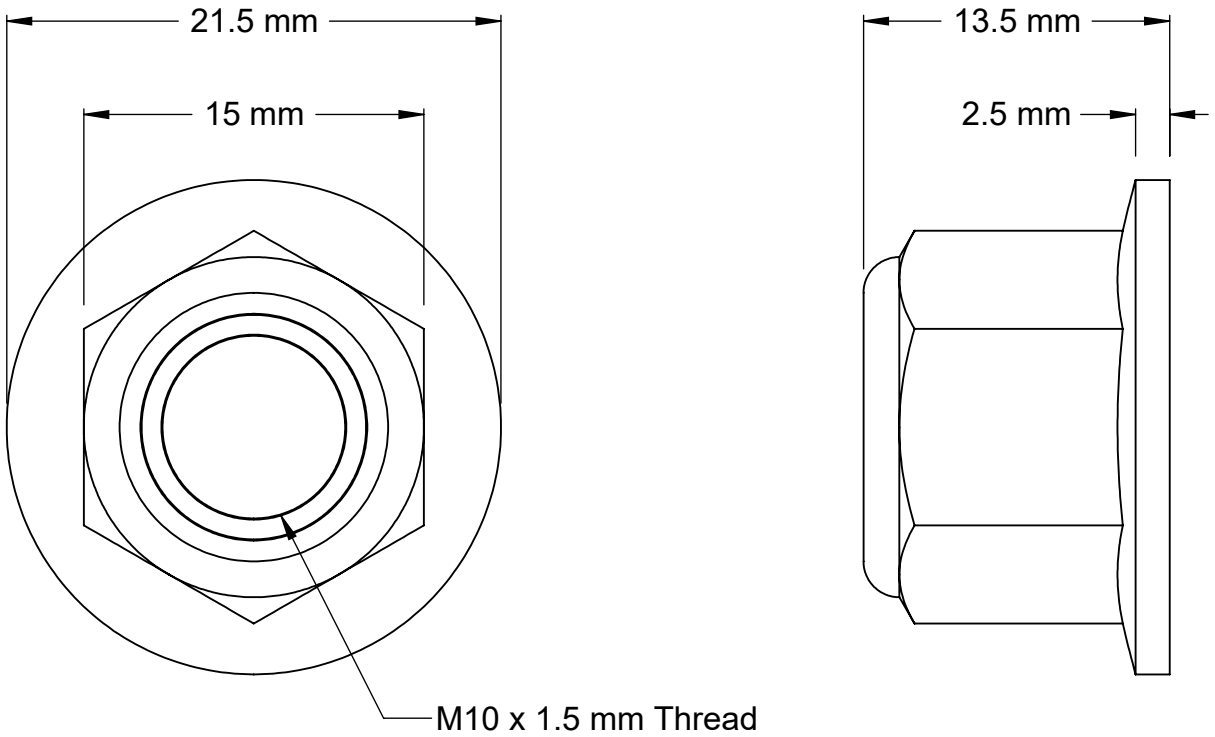


| | |
|---|---|
| https://www.trtbolt.com | Part Number: **TNNLHFM10-150TH13-5DA21-5** |
| Information in this drawing is only for reference. | Titanium Nylon Lock Flange Hex Nut M10x1.50x13.5mm H15 |