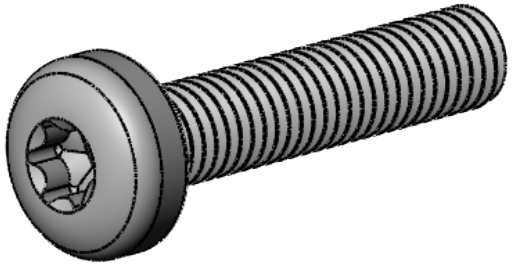

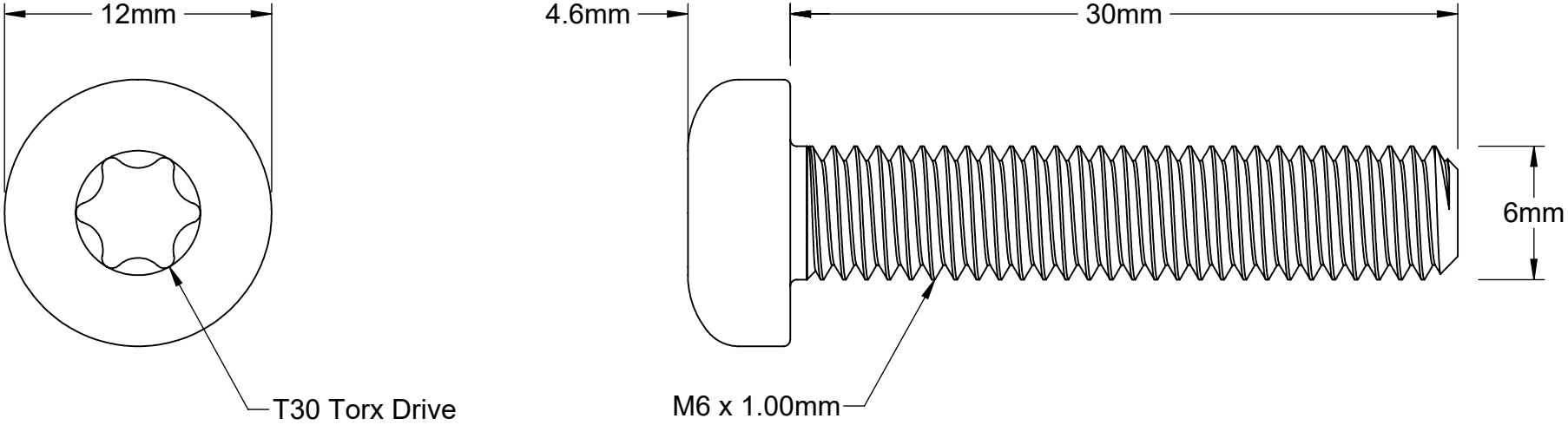

https://www.trtbolt.com	Part Number: **TBPATOM6-100F30**
Information in this drawing is only for reference.	Titanium Pan Head Torx Bolt M6x1.00x30mm T30