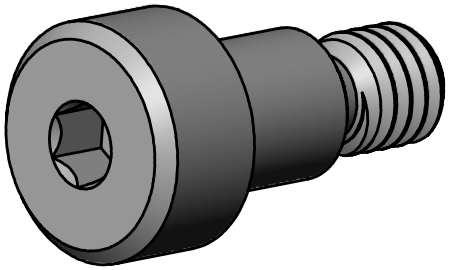

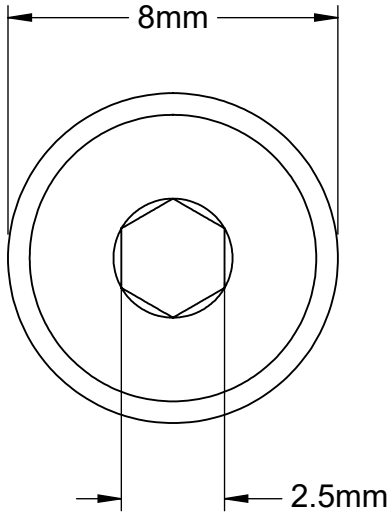

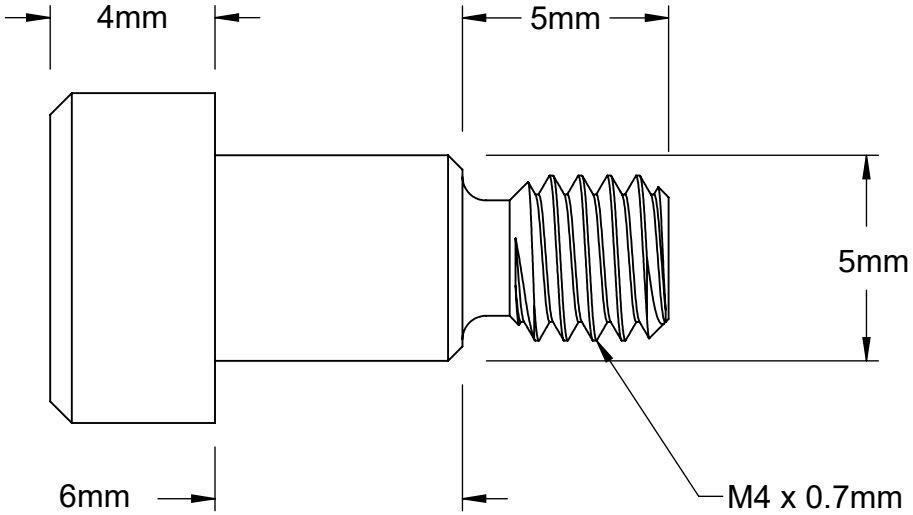

https://www.trtbolt.com	Part Number: **TBSDHEM4-070P6**
Information in this drawing is only for reference.	Titanium Shoulder Hex Bolt M4x0.70x6mm H2.5