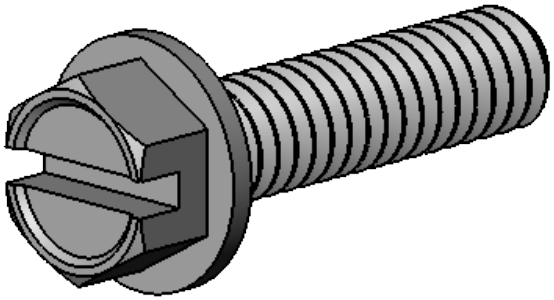

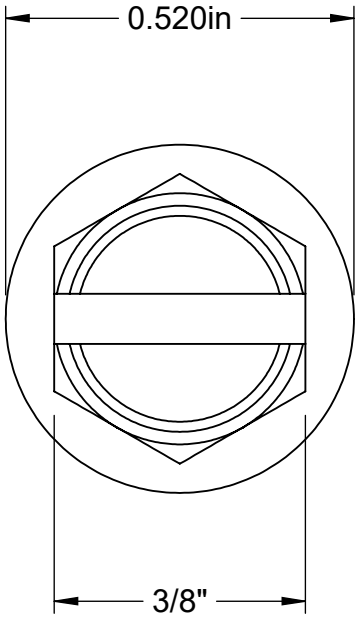

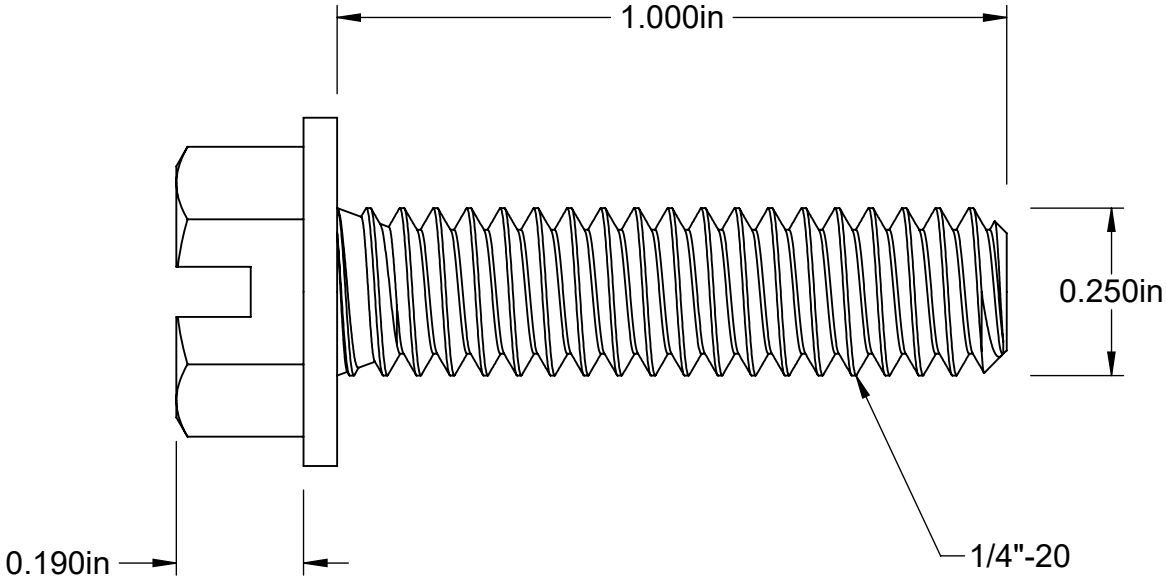

https://www.trtbolt.com	Part Number: **TBHXSLI1-4-20F10**
Information in this drawing is only for reference.	Titanium Slotted Flange Hex Bolt 1/4-20x1Inch H3/8