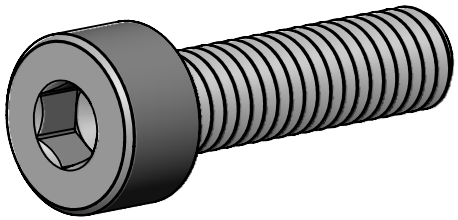

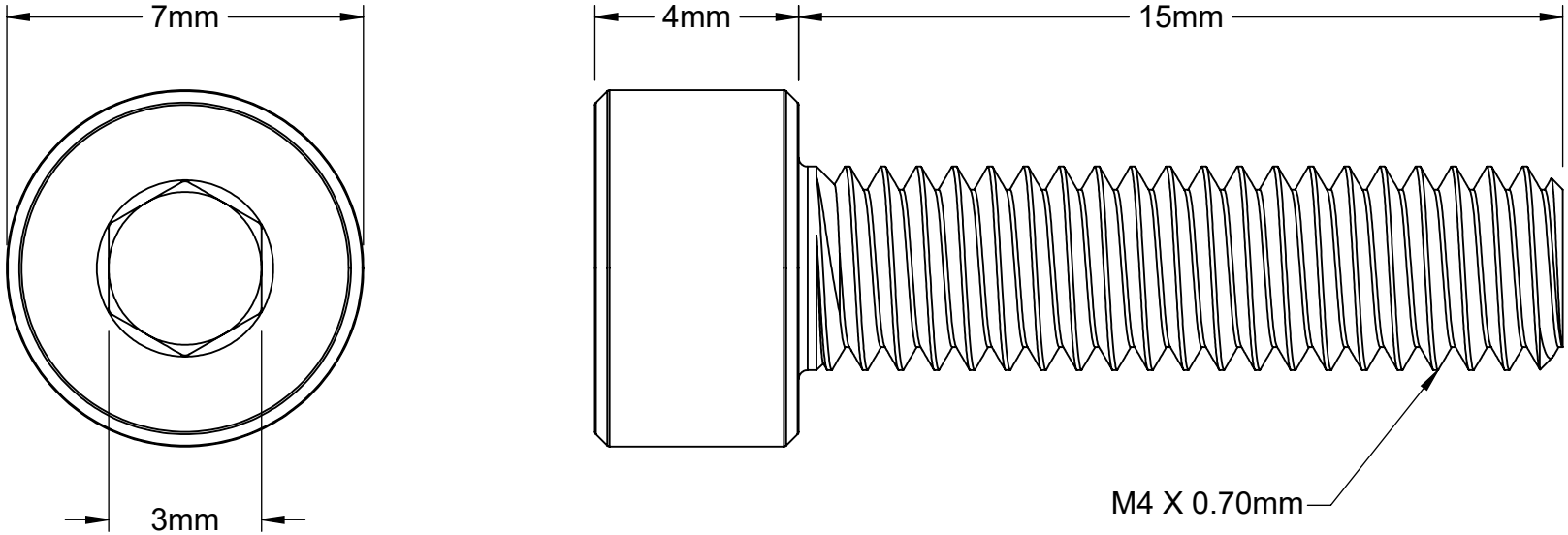

https://www.trtbolt.com	Part Number: **TBSOHEM4-070F15**
Information in this drawing is only for reference.	Titanium Socket Head Hex Bolt M4x0.70x15mm H3